U.I. Lapp GmbH · Schulze-Delitzsch-Straße 25 · 70565 Stuttgart

To all customers of the EPIC® H-B product series

22.05.2026

Product change: EPIC® H-B housings – double locking lever

Dear Customers,

Dear Business Partners,

We would like to inform you of an update to our product range.

As part of the continuous development of our products, the double locking levers of the EPIC® H-B housings are being redesigned. In a first step, this modification affects sizes from **H-B 10 to H-B 24**.

During the redesign, special emphasis was placed on maintaining existing features while further improving user benefits::

- The housings with the new locking levers are fully **backward compatible** with existing housing variants.
- **Functionality, fit, and compatibility** remain unchanged**.**
- The mechanical properties have been optimized to ensure **increased robustness and durability**.
- The new design offers **improved ergonomics** and requires less force for locking and unlocking.
- The design is based on the **modern design language of the current EPIC® rectangular connector series.**

U.I. Lapp GmbH
Schulze-Delitzsch-Straße 25
70565 Stuttgart
Phone: +49 (0)7 11/78 38-01
Fax: +49 (0)7 11/78 38-26 40
E-Mail: info.de.uil@lapp.com
www.lapp.com

Commercial Register
Stuttgart HRB 12720

Executive management
Michael Seddig, Adrianus van de Noort,
Lutz Grotebrune, Dr. Wilma Kauke

Chairman of the Supervisory Board
Matthias Lapp

A Company of the LAPP Group

Lapp Insulator is not affiliatedwith the LAPP Group



EPIC® H-B housing – old version (left), current version (center), and new version (right) using a surface-mount housing as an example (example image)



Redesigned locking levers (new version) in detail (example image)

Please note that the new metal-reinforced plastic locking levers are only interchangeable with the correspondingly revised housing variants. Installation of the new design on existing housings with the previous metal levers is not intended. The new levers will also be available as **replacement parts** for the housings in the new design **under part number 7433510352 EPIC H-B 10-24 QB.**

As part of this product update, the **existing part numbers for the housings** will remain **unchanged** to keep the administrative burden on you as low as possible. The gaskets come pre-installed.

Furthermore, this enhancement allows us to continue offering you a **stable and competitive pricing structure** in the future—while maintaining the same quality and performance of our products.

U.I. Lapp GmbH
Schulze-Delitzsch-Straße 25
70565 Stuttgart
Phone: +49 (0)7 11/78 38-01
Fax: +49 (0)7 11/78 38-26 40
E-Mail: info.de.uil@lapp.com
www.lapp.com

Commercial Register
Stuttgart HRB 12720

Executive management
Michael Seddig, Adrianus van de Noort,
Lutz Grotebrune, Dr. Wilma Kauke

Chairman of the Supervisory Board
Matthias Lapp

A Company of the LAPP Group

Lapp Insulator is not affiliated with the LAPP Group

We are also providing you with a sample comparison of the external dimensions. This shows that the new design is more compact than the current version and is therefore particularly suitable for applications with limited installation space.

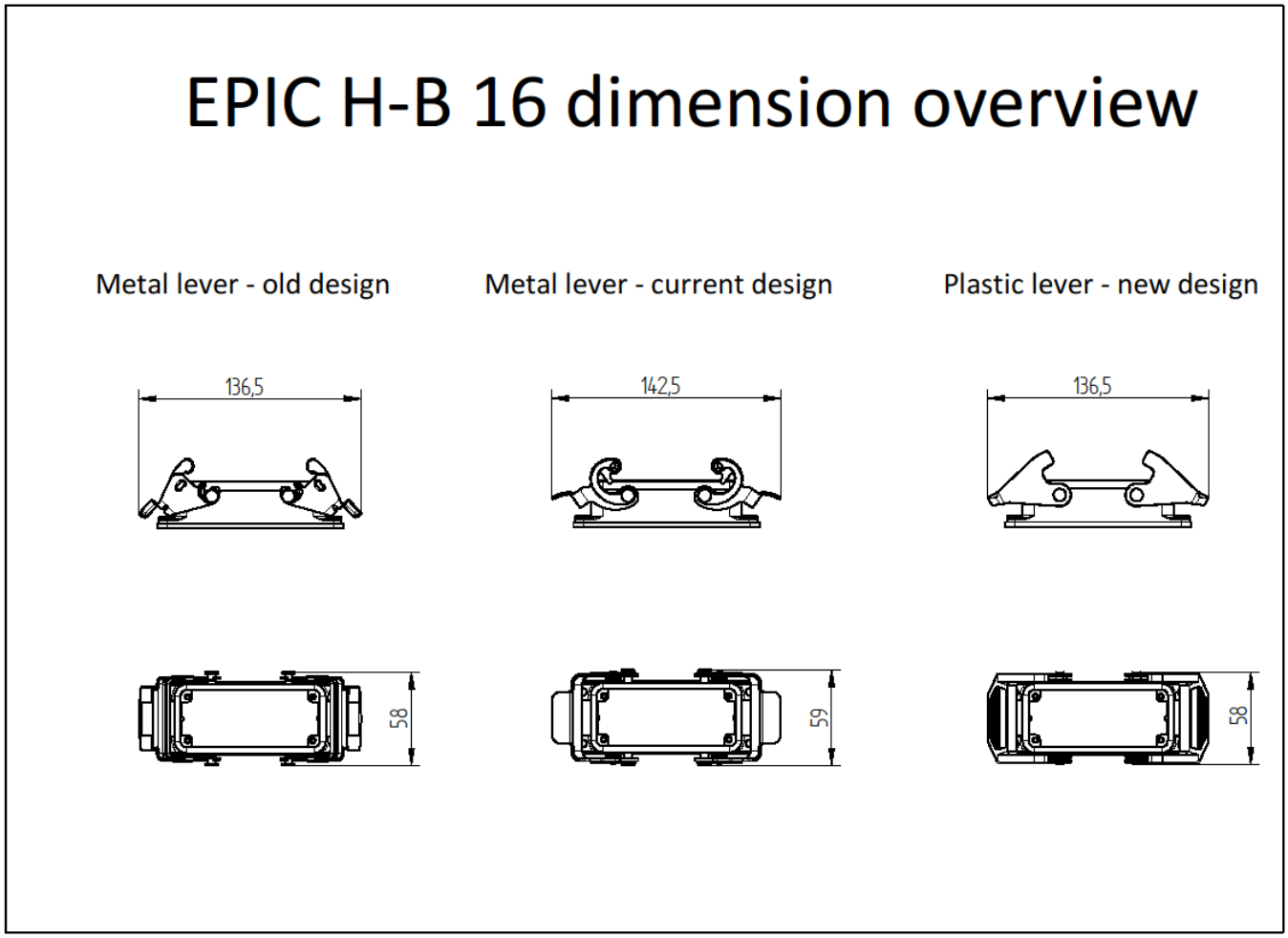

Comparison of the external dimensions of different double locking lever generations (example illustration)

The first shipments of the new levers will begin in **September 2026**.
Please note that **during the transition phase, both previous and new versions** may be **shipped** depending on current inventory levels.
The technical documentation (e.g., data sheets, installation instructions, drawings, and CAD data) will be updated and made available at the time of the new version's market launch.

U.I. Lapp GmbH
Schulze-Delitzsch-Straße 25
70565 Stuttgart
Phone: +49 (0)7 11/78 38-01
Fax: +49 (0)7 11/78 38-26 40
E-Mail: info.de.uil@lapp.com
www.lapp.com

Commercial Register
Stuttgart HRB 12720

Executive management
Michael Seddig, Adrianus van de Noort,
Lutz Grotebrune, Dr. Wilma Kauke

Chairman of the Supervisory Board
Matthias Lapp

A Company of the LAPP Group

Lapp Insulator is not affiliated with the LAPP Group

We have provided an overview of the affected items in the attached list to enable clear and transparent identification.

Part Number	Item Description	Housing Type
H-B 10		
10032000	EPIC H-B 10 AG	Panel-mount base
19034000	EPIC H-B 10 SGR M20	Surface-mount base
19034100	EPIC H-B 10 SGR M25	Surface-mount base
19035000	EPIC H-B 10 SGRL M20	Surface-mount base
19035100	EPIC H-B 10 SGRL M25	Surface-mount base
79035200	EPIC H-B 10 SGRH M25	Surface-mount base
79035400	EPIC H-B 10 SGRH M32	Surface-mount base
79036200	EPIC H-B 10 SGRLH M25	Surface-mount base
79036400	EPIC H-B 10 SGRLH M32	Surface-mount base
19045000	EPIC H-B 10 TSB M20	Hood
19041000	EPIC H-B 10 TGB M20	Hood
79057700	EPIC H-B 10 TSB M25	Hood
79055700	EPIC H-B 10 TGB M25	Hood
79057200	EPIC H-B 10 TSBH M25	Hood
79055400	EPIC H-B 10 TGBH M32	Hood
79055200	EPIC H-B 10 TGBH M25	Hood
19046000	EPIC H-B 10 TBF M20	Cable-coupler Hood
79040200	EPIC H-B 10 TBF M25	Cable-coupler Hood
79040600	EPIC H-B 10 TBFH M32	Cable-coupler Hood
79040400	EPIC H-B 10 TBFH M25	Cable-coupler Hood
H-B 16		
10072000	EPIC H-B 16 AG	Panel-mount base
19074000	EPIC H-B 16 SGR M25	Surface-mount base
19075000	EPIC H-B 16 SGRL M25	Surface-mount base
79085200	EPIC H-B 16 SGRH M25	Surface-mount base
79085400	EPIC H-B 16 SGRH M32	Surface-mount base
79086200	EPIC H-B 16 SGRLH M25	Surface-mount base
79086400	EPIC H-B 16 SGRLH M32	Surface-mount base
19083000	EPIC H-B 16 TSB M25	Hood
19081000	EPIC H-B 16 TGB M25	Hood
79107400	EPIC H-B 16 TSBH M32	Hood
79107200	EPIC H-B 16 TSBH M25	Hood
79105200	EPIC H-B 16 TGBH M25	Hood
79105400	EPIC H-B 16 TGBH M32	Hood
19086000	EPIC H-B 16 TBF M25	Cable-coupler Hood
79090401	EPIC H-B 16 TBFH 2xM32	Cable-coupler Hood
79090400	EPIC H-B 16 TBFH M32	Cable-coupler Hood
79090200	EPIC H-B 16 TBFH M25	Cable-coupler Hood

U.I. Lapp GmbH
Schulze-Delitzsch-Straße 25
70565 Stuttgart
Phone: +49 (0)7 11/78 38-01
Fax: +49 (0)7 11/78 38-26 40
E-Mail: info.de.uil@lapp.com
www.lapp.com

Commercial Register
Stuttgart HRB 12720

Executive management
Michael Seddig, Adrianus van de Noort,
Lutz Grotebrune, Dr. Wilma Kauke

Chairman of the Supervisory Board
Matthias Lapp

A Company of the LAPP Group

Lapp Insulator is not affiliated with the LAPP Group

H-B 24		
10102000	EPIC H-B 24 AG	Panel-mount base
19104000	EPIC H-B 24 SGR M25	Surface-mount base
19105000	EPIC H-B 24 SGRL M25	Surface-mount base
79135200	EPIC H-B 24 SGRH M25	Surface-mount base
79135400	EPIC H-B 24 SGRH M32	Surface-mount base
79136200	EPIC H-B 24 SGRLH M25	Surface-mount base
79136400	EPIC H-B 24 SGRLH M32	Surface-mount base
19122000	EPIC H-B 24 TGB M25	Hood
19114000	EPIC H-B 24 TSB M25	Hood
19112000	EPIC H-B 24 TGB M32	Hood
19124000	EPIC H-B 24 TSB M32	Hood
79157600	EPIC H-B 24 TSBH M32	Hood
79157400	EPIC H-B 24 TSBH M25	Hood
79155600	EPIC H-B 24 TGBH M32	Hood
79155400	EPIC H-B 24 TGBH M25	Hood
19127000	EPIC H-B 24 TBF M25	Cable-coupler Hood
19117000	EPIC H-B 24 TBF M32	Cable-coupler Hood
79140600	EPIC H-B 24 TBFH M32	Cable-coupler Hood
79140400	EPIC H-B 24 TBFH M25	Cable-coupler Hood

For applications requiring a stainless steel lever, we will continue to offer suitable solutions within our LAPP product portfolio. With the introduction of the EPIC® H-B EMC series, which is currently under development and is expected to be available by the end of 2026, appropriate options will be available for this purpose.

With this further development, we ensure that you will continue to benefit from the quality and reliability you have come to expect from our products—while enjoying improved handling and unchanged functionality.

We would be happy to send you further information and advise you personally. Your designated contact person is available to assist you at any time.

Yours sincerely

U.I. Lapp GmbH

U.I. Lapp GmbH
Schulze-Delitzsch-Straße 25
70565 Stuttgart
Phone: +49 (0)7 11/78 38-01
Fax: +49 (0)7 11/78 38-26 40
E-Mail: info.de.uil@lapp.com
www.lapp.com

Commercial Register
Stuttgart HRB 12720

Executive management
Michael Seddig, Adrianus van de Noort,
Lutz Grotebrune, Dr. Wilma Kauke

Chairman of the Supervisory Board
Matthias Lapp

A Company of the LAPP Group

Lapp Insulator is not affiliated with the LAPP Group